ERACS.C

HIGHER EFFICIENCY AIR-COOLED SCREW CHILLER

Cooling Capacity: 240-2027kW

HOT WATER

COOLING

HFC R-134a

CLIMAVENETA

CLIMAVENETA "ERACS.C" high efficiency screw chiller has imported the latest technology from Italy which can obviously reduce the total investment and operation cost without conventional cooling tower, cooled water pump and the cooling system. The unit can be installed on the building roof or outdoor that no need extra machine room. So the ERACS.C units are quite suit for all commercial and industry application.

GREEN CERTIFICATION RELEVANT

The Products with Excellent Performance Can Meet LEED Certification

All Series Reach China's Energy Coversation Standard

ERACS.C higher efficiency air-cooled screw chiller

Screw Type Compressor

- Semi-hermetic screw compressor specially designed for HFC134a with higher compression efficiency under full load as well as part load;
- Precisely manufactured twin-screw rotor with aircraft-grade bear featuring in high reliability, low noise, low vibration and stable running;
- The motor drive the bear directly with least moving component and wearing part that cause no energy loss and higher mechanical efficiency;
- Automatically adjust power output according to load by microprocessor.
- The slide valve is fixed for stepless control and increase part load performance.

High Performance Fan

High efficiency exterior rotor fan from German brand. It can reduce the energy consumption and fan noise.

Super Low Noise

All compressors of ERACS.C series are installed on the vibration isolator. The rubber pad is also fixed between compressor and frame to prevent vibration and noise. The fan is exclusive designed with aircraft grade blades and aluminum-cast exterior motor as well as the air deflector cylinder to eliminate air side noise. According to different noise request in different application, the super low noise unit also can be installed. The noise of super low noise unit (SL) is 8-10 dB(A) lower than standard unit (B).

Green Technology

- Environment friendly HFC134a.
- Optimized refrigerant system for better electric saving, lower CO_2 emission and higher operation efficiency.

HFC R-134a

Electronic Expansion Valve

EXV, with high-sensitivity and precise control, has high adaptability of partial load working condition. And it can improve the efficiency of the unit under full load as well as part load.

Build-in Pump and Hydraulic Kit

The build-in water pump (available in different head) or hydraulic kit can be selected for the unit. The hydraulic kit includes all necessary kits such as strainer, pump, safety valve, pressure gauge, pressure difference switch, stop valve and pump control system.

Customer can simplify the installation on site, save installation area and increase auto-control level by selecting build-in kits.

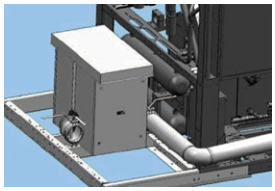

Reliable Operation

The unit is designed, manufactured, tested according to international and local standard AHRI, EN, UNI, JIS, GB/T18430.1 for reliable performance. And the electrical system is also strictly designed and produced comply with standard IEC60204-1/GB5226.1. The unit is controlled by the dedicated microprocessor control system. In order to protect the operation safety, the high/ low pressure switch, over/under voltage, phase failure, over load, winding over heat, gas exhaust temperature, water flow switch and oil heater are all equipped. For the evaporator, the heater is attached to the evaporator exterior to prevent freezing.

And the enclosure protection comply with GB4208-2008 standard.

Heat Recovery-Hot Water Free!

The heat of condensation usually will be exhaust to the environment during air-cooled heat pump working in cooling. And also the unit can not transfer all the heat during heating. So CLIMAVENETA introduce the heat recovery technology which can recovery the condensation heat during cooling and extra heat during heating to produce free hot water. This technology will help users to save obvious operation cost.

Optional function: low outdoor temp. working, ice storage, fin protection, anti-salt protected fin, remote keyboard, power factor regulation and so on.

Note：The anti-noise chamber for compressor is option for standard (-B) unit. Please order if required.

Latest control system

The chiller adopts a new control system with a friendly human-machine interface, excellent controls and adjustments ability, strong capabilities of function expansion, monitoring and management, as well as strong compatibility. The chiller also contains several optional accessories, and adds remote and group control functions.

Friendly human-machine interface

The operation screen is embedded in the unit for easy operation and good protection. The automatic control by the computer realizes unattended operation.

LCD screen can display data and parameter adjustment in various languages and menus. According to the tradition of Climaveneta, the status and parameters of the compressor are visually displayed individually to make sure the operating status clear at a glance.

Unit control and operation management

The advanced microcomputer intelligent control system of W3000 contains specially designed control algorithm of Climaveneta. It highlights the energy efficiency and reliability of the unit. The balanced running time of FIFO compressor prolongs the life of machine. The automatic adjustment of the output load makes the machine more energy saving. Combining with the load shedding system of the compressor can achieve 25-100% stepless adjustment. The adjustments and settings of the operating parameters can adapt to different environments. The temperature and pressure protection using analog measurement can predict and prevent of failure and increase reliability.

Network communication and building management control

The chiller supports BMS connection and can connect to common BMS systems such as Climaveneta, De'Longhi, MODBUS, LONWORKS, BACNET and so on.

FWS network server

Microcomputer intelligent controller can be equipped with FMS network server to monitor, set and adjust parameters and control the unit operation through LAN or Internet.

Fault protection, alarm and analysis capabilities

The microcomputer intelligent controller contains perfect functions of fault protection, alarm, recording and analysis. It has protection functions of high/low pressure switch, lack of phase, reverse phase, overload, overcurrent, overheat, exhaust temperature, water flow, anti-frost and so on. The controller also achieves fault recording and alarm display. The unique "Black Box" fault recording and analyzing system can record 400 failures and more than 200 field data before each failure. It can diagnose and remove faults rapidly to improve the technical support effect. By connecting to the Climaveneta remote service program, it can find potential failures before they occur and take proper preventive treatments.

Remote group controller

Sequencer

- LCD Visual display
- Group control and management
- Centralized control unit ON/OFF
- Pump control
- Potocols as ModBus, LonWork, BACNET are optional

Manager 3000 (Recommended)

- Touch-screen
- Group control and management
- Centralized control unit ON/OFF
- Pump control
- Potocols as ModBus, LonWork, BACNET are optional

Microprocessor Control Features

Microprocessor	W3000	Microprocessor	W3000
Remote on/off with external volt-free contact	√	Energy limit function	OPT
Multi-language menu	√	Manual control	√
Phase sequence relay	√	ModBus communication protocol	OPT
Cumulative fault alarm	√	BACNET communication protocol	OPT
Alarms code function	√	LonWorks communication protocol	OPT
"BLACK BOX" function for alarm events	√	Pump control	OPT
Self-test when power on	√	Backup pump control	OPT
Real time programming of daily/weekly program	Par.	Water temp. set-point regulation from external signal(4-20mA)	OPT
Evaporator inlet/outlet water temp. display	√	Remote electic relay control	OPT
Compressor/unit alarms display	√	Local/remote monitor (FWS)	OPT
General unit alarms display	√	Remote secondary temp. control	OPT
Entering water temp. ratio control	√	Set-point regulation from external signal (0-5V)	OPT
Start/stop operating timer	Par.	Compressor run-timer, time balance & FIFO	√
Double set-point timer	Par.	Compressor start scheduling	√
"Pump-Down" when stopped	√		

√ Standard OPT avaiable on request Par. available by modifying a value of the configuraton paramenters

Nomenclature

ERACS 2402 C - SL- D

- D — Heat recovery: D partial heat recovery
- SL — Configuration: B standard, SL super low noise, HE high efficiency
- C — Design number
- 2402 — Model
- ERACS — Air-cooled screw chiller

ERACS 2402C-B-D

Means standard high efficiency air-cooled screw chiller using R134a with partial heat recovery function and unit model is 2402.

Suggested Application

B Standard unit suitable for normal place

SL Super low noise unit suitable for the place where have strict noise requirement

ERACS.C

General Technical Data

ERACS.C-B		0701	0821	0951	1051	1201	1301	1501	1651	1902	2102
ERACS.C-B											
Cooling capacity(1)	kW	252.1	297.3	324.7	366.8	414.3	454.3	504.7	562.9	670.8	745.1
Power input(1)	kW	73.1	82.7	95.3	103.9	117.9	133.3	148.7	162.8	184.6	205.3
Evaporator water flow rate (1)	m^3/h	43.4	51.2	55.9	63.1	71.3	78.2	86.9	96.9	115.5	128.3
Evaporator water pressure drop (1)	kPa	27.1	37.7	34.7	44.3	49.9	38.1	47.0	34.7	50.5	56.8
ERACS.C-B-D											
Cooling capacity (1)	kW	261.6	308.5	336.9	380.5	429.8	471.4	523.6	584.1	695.9	773.0
Power input (1)	kW	70.6	79.8	92.0	100.3	113.8	128.7	143.5	157.1	178.2	198.2
Evaporator water flow rate (1)	m^3/h	45.0	53.1	57.9	65.4	73.9	81.1	90.0	100.4	119.7	132.9
Evaporator water pressure drop (1)	kPa	29.1	40.5	37.3	47.6	53.6	40.9	50.5	37.3	54.2	61.0
Partial heat recovery (1)(2)	kW	65.3	73.8	85.1	92.8	105.2	119.0	132.8	145.3	164.8	183.3
Partial heat recovery water flow rate (1)(2)	m^3/h	11.3	12.8	14.8	16.1	18.3	19.0	23.1	25.3	28.6	31.9
Partial heat recovery water pressure drop(1)(2)	kPa	57.0	40.9	54.4	41.3	53.2	42.3	58.5	49.2	53.6	52.1
Microprocessor		W3000									
Compressors											
Number of compressors		1	1	1	1	1	1	1	1	2	2
Number of circuit		1	1	1	1	1	1	1	1	2	2
Capacity regulating		25-100%								12.5-100%	
Fans											
Number of fans		4	6	6	6	8	8	8	10	12	12
Air flow rate	m^3/s	23.0	31.1	31.1	34.0	42	42	44.8	52.8	63.6	61
Fan power	kW	2	2	2	2	2	2	2	2	2	2
Refrigerant charge											
Refrigerant R134a	kg	50	60	62	77	77	79	88	91	109	120
Oil	kg	17	17	21	21	25	25	25	25	42	42
Dimension											
Length	mm	3100	3100	3100	4000	4000	4000	4900	4900	5800	5800
Width	mm	2260	2260	2260	2260	2260	2260	2260	2260	2260	2260
Height	mm	2450	2450	2450	2450	2450	2450	2450	2450	2450	2450
Operation weight	kg	3140	3290	3430	3940	4340	4490	4920	5240	5990	6320
Noise	dB(A)	69	70	70	69	70	70	70	71	71	71

Note:

(1) Chilled water (in/out) 12/7℃ ; Ambient temperature 35℃ ;

(2) Partial heat recovery water (in/out) 40/45℃ ;

Noise measured at 1 meter from the unit.

General Technical Data

ERACS.C-B		2402	2652	2952	3302	3602	3902	4252	4653	5103	5553
ERACS.C-B											
Cooling capacity(1)	kW	839.3	931.0	1037.0	1152.0	1270.0	1374.0	1502.0	1637.0	1780.0	1954.0
Power input(1)	kW	236.9	260.3	289.3	325.7	349.4	372.4	416.1	452.8	503.1	577.6
Evaporator water flow rate (1)	m^3/h	144.5	160.3	178.5	198.3	218.6	236.5	258.5	281.8	306.4	336.3
Evaporator water pressure drop (1)	kPa	48.0	40.5	50.2	30.7	37.3	46.4	56.1	34.7	47.9	57.7
ERACS.C-B-D											
Cooling capacity (1)	kW	870.7	965.9	1076.0	1195.0	1317.0	1425.0	1558.0	1698.0	1847.0	2027.0
Power input (1)	kW	228.6	251.2	279.2	314.3	271.8	359.3	401.5	436.9	485.5	557.4
Evaporator water flow rate (1)	m^3/h	149.7	166.1	185.0	205.5	226.5	245.1	267.9	292.0	317.6	348.6
Evaporator water pressure drop (1)	kPa	51.5	43.5	53.9	33.0	40.0	49.8	60.3	37.3	51.5	62.0
Partial heat recovery (1)(2)	kW	211.4	232.4	258.3	290.8	311.8	332.4	371.4	404.1	449.1	515.6
Partial heat recovery water flow rate (1)(2)	m^3/h	36.7	40.4	44.9	50.5	54.2	57.8	64.5	70.2	78.0	89.6
Partial heat recovery water pressure drop(1)(2)	kPa	50.8	50.9	53.2	49.3	56.1	49.7	52.9	52.3	50.6	55.4
Microprocessor		W3000									
Compressors											
Number of compressors		2	2	2	2	2	2	2	3	3	3
Number of circuit		2	2	2	2	2	2	2	3	3	3
Capacity regulating		12.5-100%							8.5-100%		
Fans											
Number of fans		12	14	16	16	20	24	24	24	26	26
Air flow rate	m^3/s	65.3	72.5	82.9	79.8	101.2	127.2	127.2	126.6	124.8	128.5
Fan power	kW	2	2	2	2	2	2	2	2	2	2
Refrigerant charge											
Refrigerant R134a	kg	133	147	186	198	220	235	246	294	314	332
Oil	kg	50	50	50	50	60	60	60	75	80	90
Dimension											
Length	mm	7000	7000	7900	7900	9400	11200	11200	12400	12400	12400
Width	mm	2260	2260	2260	2260	2260	2260	2260	2260	2260	2260
Height	mm	2450	2450	2450	2450	2450	2450	2450	2450	2450	2450
Operation weight	kg	7550	7610	8610	9080	9630	10210	10300	13290	13410	13480
Noise	dB(A)	72	72	73	73	72	73	73	73	74	74

Note:
(1) Chilled water (in/out) 12/7℃ ; Ambient temperature 35℃ ;
(2) Partial heat recovery water (in/out) 40/45℃ ;
Noise measured at 1 meter from the unit.

ERACS.C

General Technical Data

ERACS.C-B-HE		0701	0821	0951	1051	1201	1301	1501	1651
ERACS.C-B-HE									
Cooling capacity(1)	kW	268.7	313.8	350.2	391.8	440.2	476.3	537.7	593.3
Power input(1)	kW	66.4	79.7	88.1	97.4	111.6	124.5	141.1	155.0
Evaporator water flow rate (1)	m^3/h	46.3	54.0	60.3	67.4	75.8	82.0	92.6	102.1
Evaporator water pressure drop (1)	kPa	30.8	32.4	33.8	28.0	35.3	37.7	31.6	32.8
Microprocessor		W3000							
Compressors									
Number of compressors		1	1	1	1	1	1	1	1
Number of circuit		1	1	1	1	1	1	1	1
Capacity regulating		25-100%							
Fans									
Number of fans		6	6	8	8	10	10	10	12
Air flow rate	m^3/s	34	34	42.0	44.8	52.8	52.8	55.6	63.6
Fan power	kW	2	2	2	2	2	2	2	2
Refrigerant charge									
Refrigerant R134a	kg	66	80	82	102	102	105	117	121
Oil	kg	17	17	21	21	25	25	25	25
Dimension									
Length	mm	4000	4000	4000	4900	4900	4900	5800	5800
Width	mm	2260	2260	2260	2260	2260	2260	2260	2260
Height	mm	2450	2450	2450	2450	2450	2450	2450	2450
Operation weight	kg	3440	3770	3930	4700	5050	5090	5610	5950
Noise	dB(A)	71	71	72	72	73	73	72	73

Note:
(1) Chilled water (in/out) 12/7℃ ; Ambient temperature 35℃ ;
Noise measured at 1 meter from the unit.

General Technical Data

ERACS.C-SL		0701	0821	0951	1051	1201	1301	1501	1651	1902	2102
ERACS.C-SL											
Cooling capacity(1)	kW	238.7	284.7	304.9	346.5	390.9	424.9	474.3	528.0	634.8	705.9
Power input(1)	kW	78.9	90.5	101.8	112.5	127.9	142.3	158.7	175.9	197.6	219.4
Evaporator water flow rate (1)	m^3/h	41.1	49.0	52.5	59.7	67.3	73.2	81.6	90.9	109.3	121.5
Evaporator water pressure drop (1)	kPa	24.3	34.6	30.6	39.5	44.4	33.3	41.5	30.5	45.3	51.0
ERACS.C-SL-D											
Cooling capacity (1)	kW	247.7	295.4	316.3	359.5	405.6	440.9	492.1	547.8	658.6	732.4
Power input (1)	kW	76.1	87.3	98.2	108.5	123.5	137.3	153.1	169.7	190.7	211.7
Evaporator water flow rate (1)	m^3/h	42.6	50.8	54.4	61.8	69.8	75.8	84.6	94.2	113.3	126.0
Evaporator water pressure drop (1)	kPa	26.1	37.2	32.8	42.4	47.7	35.7	44.6	32.8	48.6	54.8
Partial heat recovery (1)(2)	kW	70.4	80.8	90.9	100.4	114.2	127.0	141.7	157.0	176.4	195.8
Partial heat recovery water flow rate (1)(2)	m^3/h	12.2	14.0	15.8	17.4	19.8	22.1	24.6	27.3	30.7	34.0
Partial heat recovery water pressure drop(1)(2)	kPa	55.4	49.0	54.9	48.4	55.1	53.6	51.5	57.5	52.0	52.9
Microprocessor		W3000									
Compressors											
Number of compressors		1	1	1	1	1	1	1	1	2	2
Number of circuit		1	1	1	1	1	1	1	1	2	2
Capacity regulating		25-100%								12.5-100%	
Fans											
Number of fans		4	6	6	6	8	8	8	10	12	12
Air flow rate	m^3/s	16.7	21.9	21.9	24.4	29.5	29.5	32.0	37.1	44.9	42.4
Fan power	kW	1.1	1.1	1.1	1.1	1.1	1.1	1.1	1.1	1.1	1.1
Refrigerant charge											
Refrigerant R134a	kg	53	64	66	82	82	84	94	97	116	127
Oil	kg	17	17	21	21	25	25	25	25	42	42
Dimension											
Length	mm	3100	3100	3100	4000	4000	4000	4900	4900	5800	5800
Width	mm	2260	2260	2260	2260	2260	2260	2260	2260	2260	2260
Height	mm	2450	2450	2450	2450	2450	2450	2450	2450	2450	2450
Operation weight	kg	3320	3470	3600	4130	4510	4690	5120	5440	6290	6620
Noise	dB(A)	57	58	58	57	58	58	58	60	60	60

Note:
(1) Chilled water (in/out) 12/7℃ ; Ambient temperature 35℃ ;
(2) Partial heat recovery water (in/out) 40/45℃ ;
Noise measured at 1 meter from the unit.

ERACS.C

General Technical Data

ERACS.C-SL		2402	2652	2952	3302	3602	3902	4252	4653	5103	5553
ERACS.C-SL											
Cooling capacity(1)	kW	798.9	880.8	983.3	1104.0	1200.0	1298.0	1427.0	1552.0	1698.0	1867.0
Power input(1)	kW	251.4	278.3	308.8	342.1	374.4	399.1	446.7	482.7	531.6	613.2
Evaporator water flow rate (1)	m^3/h	137.5	151.6	169.3	190.0	206.5	223.5	245.7	267.2	292.3	321.4
Evaporator water pressure drop (1)	kPa	43.5	36.2	45.1	28.2	33.3	41.5	50.7	31.2	43.6	52.7
ERACS.C-SL-D											
Cooling capacity (1)	kW	828.8	913.8	1020.0	1145.0	1245.0	1347.0	1481.0	1610.0	1761.0	1937.0
Power input (1)	kW	242.6	268.5	298.0	330.1	361.3	385.1	431.1	465.8	513.0	591.7
Evaporator water flow rate (1)	m^3/h	142.5	157.1	175.4	196.9	214.1	231.6	254.7	276.9	302.8	333.1
Evaporator water pressure drop (1)	kPa	46.7	38.9	48.4	30.3	35.8	44.6	54.5	33.5	46.8	56.6
Partial heat recovery (1)(2)	kW	224.4	248.4	275.7	305.3	334.2	356.2	398.8	430.9	474.6	547.3
Partial heat recovery water flow rate (1)(2)	m^3/h	39.0	43.2	47.9	53.1	58.1	61.9	69.3	74.9	82.5	95.1
Partial heat recovery water pressure drop(1)(2)	kPa	52.0	51.2	50.7	51.2	51.3	54.8	53.3	52.7	51.7	53.4
Microprocessor		W3000									
Compressors											
Number of compressors		2	2	2	2	2	2	2	3	3	3
Number of circuit		2	2	2	2	2	2	2	3	3	3
Capacity regulating		12.5-100%							8.5-100%		
Fans											
Number of fans		12	14	16	16	20	24	24	24	26	26
Air flow rate	m^3/s	46.3	50.7	58.0	55.7	70.2	89.8	89.8	89.1	85.9	88.9
Fan power	kW	1.1	1.1	1.1	1.1	1.1	1.1	1.1	1.1	1.1	1.1
Refrigerant charge											
Refrigerant R134a	kg	141	156	197	210	233	249	261	312	333	352
Oil	kg	50	50	50	50	60	60	60	75	80	90
Dimension											
Length	mm	7000	7000	7900	7900	9400	11200	11200	12400	12400	12400
Width	mm	2260	2260	2260	2260	2260	2260	2260	2260	2260	2260
Height	mm	2450	2450	2450	2450	2450	2450	2450	2450	2450	2450
Operation weight	kg	7850	7910	8950	9440	10000	10570	10670	13780	13900	13980
Noise	dB(A)	61	61	62	62	61	62	62	62	63	63

Note:
(1) Chilled water (in/out) 12/7℃ ; Ambient temperature 35℃ ;
(2) Partial heat recovery water (in/out) 40/45℃ ;
Noise measured at 1 meter from the unit.

Electrical Data

ERACS.C	n	Maximum values							
		Compressor(each)			Fan		Total unit		
		F.L.I(kW)	F.L.A(A)	L.R.A(A)	F.L.I(kW)	F.L.A(A)	F.L.I(kW)	F.L.A(A)	S.A(A)
0701	1	98	164	267	8	17.2	106	181	284
0821	1	113	189	267	12	25.8	125	214	293
0951	1	126	218	285	12	25.8	138	244	311
1051	1	140	241	365	12	25.8	152	267	391
1201	1	160	276	459	16	34.4	176	311	493
1301	1	174	301	459	16	34.4	190	336	493
1501	1	196	332	506	16	34.4	212	366	540
1651	1	215	366	628	20	43	235	409	671
1902	2	126	218	285	24	51.6	276	488	457
2102	2	140	241	365	24	51.6	303	535	554
2402	2	160	276	459	24	51.6	345	604	669
2652	2	174	301	459	28	60.2	377	663	689
2952	2	196	332	506	32	68.8	424	732	759
3302	2	215	366	628	32	68.8	462	801	907
3602	2	236	403	715	40	86	512	891	1021
3902	2	253	432	850	48	103.2	554	966	1189
4252	2	271	463	850	48	103.2	591	1030	1207
4653	3	196/215	331/365	506/628	48	103.2	655	1133	1100
5103	3	215/235	365/402	628/715	52	111.8	718	1246	1248
5553	3	235/271	402/463	715/850	52	111.8	795	1380	1403

ERACS.C-B-HE Electrical Data

ERACS.C	n	Maximum values							
		Compressor(each)			Fan		Total unit		
		F.L.I(kW)	F.L.A(A)	L.R.A(A)	F.L.I(kW)	F.L.A(A)	F.L.I(kW)	F.L.A(A)	S.A(A)
0701	1	98	164	267	12	25.8	110	190	293
0821	1	113	189	267	12	25.8	125	214	293
0951	1	126	218	285	16	34.4	142	253	319
1051	1	140	241	365	16	34.4	156	276	399
1201	1	160	276	459	20	43	180	319	502
1301	1	174	301	459	20	43	194	344	502
1501	1	196	332	506	20	43	216	375	549
1651	1	215	366	628	24	51.6	239	417	680

Note:

F.L.I. Power input
F.L.A. Current absorption
L.R.A. Locked rotor current for single compressor
S.A. Starting current

Power input 380V-3Ph-50Hz, voltage tolerance ±10%, voltage unbalance 3%.
All the values are referred to the maximum working condition. Energy restriction function can be equipped when enery supply is not enough.

ERACS.C

Unit Dimension

ERACS 0701--1651C

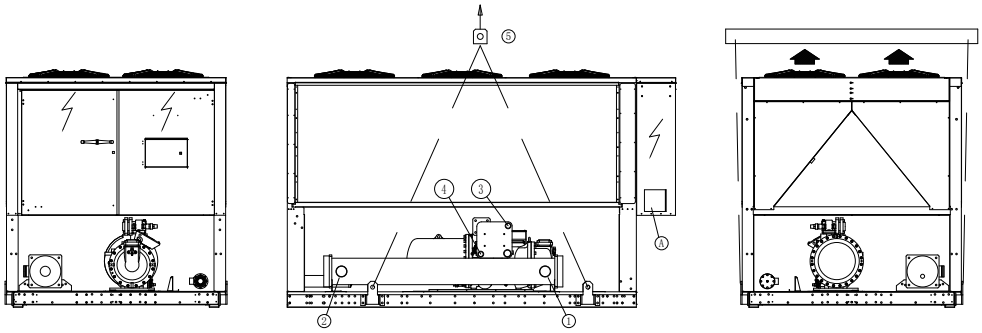

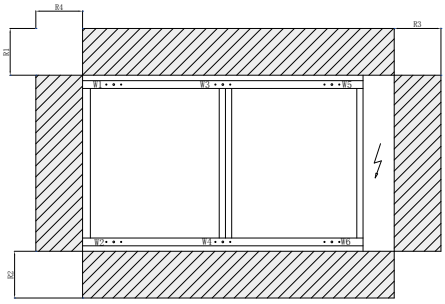

① Evaporator water inlet
② Evaporator water outlet
③ Partial heat recovery water inlet
④ Partial heat recovery water outlet
⑤ Lifting points

Minimum maintenance allowance

Model	Dimensions				Maintenance allowance				Evaporator pipe connection		Partial heat recovery pipe connection	
	A(mm)	B(mm)	H(mm)	Operating weight(Kg)	R1(mm)	R2(mm)	R3(mm)	R4(mm)	Type	IN/OUT(ϕ)	Type	IN/OUT(ϕ)
ERACS 0701C-B	3100	2260	2450	3140	2000	2000	1800	1500	Thread	4"	Victaulic	2"
ERACS 0821C-B	3100	2260	2450	3290	2000	2000	1800	1500	Victaulic	5"	Victaulic	2"
ERACS 0951C-B	3100	2260	2450	3430	2000	2000	1800	1500	Victaulic	5"	Victaulic	2"
ERACS 1051C-B	4000	2260	2450	3940	2000	2000	1800	1500	Victaulic	6"	Victaulic	2"
ERACS 1201C-B	4000	2260	2450	4340	2000	2000	1800	1500	Victaulic	6"	Victaulic	2"
ERACS 1301C-B	4000	2260	2450	4490	2000	2000	1800	1500	Victaulic	6"	Victaulic	2"
ERACS 1501C-B	4900	2260	2450	4920	2000	2000	1800	1500	Victaulic	6"	Victaulic	2"
ERACS 1651C-B	4900	2260	2450	5240	2000	2000	1800	1500	Victaulic	6"	Victaulic	2"
ERACS 0701C-SL	3100	2260	2450	3320	2000	2000	1800	1500	Thread	4"	Victaulic	2"
ERACS 0821C-SL	3100	2260	2450	3470	2000	2000	1800	1500	Victaulic	5"	Victaulic	2"
ERACS 0951C-SL	3100	2260	2450	3600	2000	2000	1800	1500	Victaulic	5"	Victaulic	2"
ERACS 1051C-SL	4000	2260	2450	4130	2000	2000	1800	1500	Victaulic	6"	Victaulic	2"
ERACS 1201C-SL	4000	2260	2450	4510	2000	2000	1800	1500	Victaulic	6"	Victaulic	2"
ERACS 1301C-SL	4000	2260	2450	4690	2000	2000	1800	1500	Victaulic	6"	Victaulic	2"
ERACS 1501C-SL	4900	2260	2450	5120	2000	2000	1800	1500	Victaulic	6"	Victaulic	2"
ERACS 1651C-SL	4900	2260	2450	5440	2000	2000	1800	1500	Victaulic	6"	Victaulic	2"
ERACS 0701C-B-HE	4000	2260	2450	3440	2000	2000	1800	1500	Thread	4"	Victaulic	2"
ERACS 0821C-B-HE	4000	2260	2450	3770	2000	2000	1800	1500	Victaulic	5"	Victaulic	2"
ERACS 0951C-B-HE	4000	2260	2450	3930	2000	2000	1800	1500	Victaulic	5"	Victaulic	2"
ERACS 1051C-B-HE	4900	2260	2450	4700	2000	2000	1800	1500	Victaulic	6"	Victaulic	2"
ERACS 1201C-B-HE	4900	2260	2450	5050	2000	2000	1800	1500	Victaulic	6"	Victaulic	2"
ERACS 1301C-B-HE	4900	2260	2450	5090	2000	2000	1800	1500	Victaulic	6"	Victaulic	2"
ERACS 1501C-B-HE	5800	2260	2450	5610	2000	2000	1800	1500	Victaulic	6"	Victaulic	2"
ERACS 1651C-B-HE	5800	2260	2450	5950	2000	2000	1800	1500	Victaulic	6"	Victaulic	2"

Unit Dimension

ERACS 1902-4252C

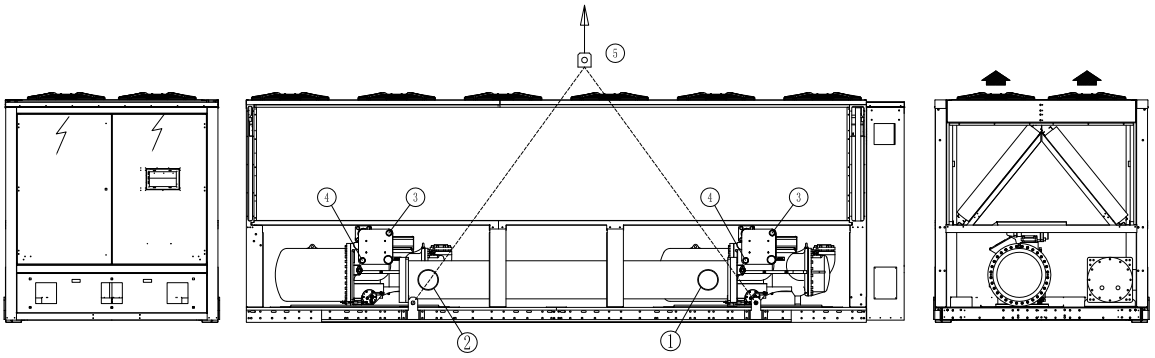

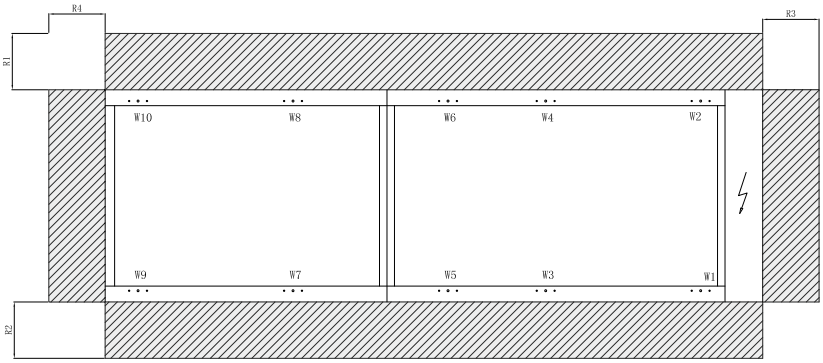

① Evaporator water inlet
② Evaporator water outlet
③ Partial heat recovery water inlet
④ Partial heat recovery water outlet
⑤ Lifting points

Minimum maintenance allowance

Model	Dimensions				Maintenance allowance				Evaporator pipe connection		Partial heat recovery pipe connection	
	A(mm)	B(mm)	H(mm)	Operating weight(Kg)	R1(mm)	R2(mm)	R3(mm)	R4(mm)	Type	IN/OUT(ϕ)	Type	IN/OUT(ϕ)
ERACS 1902C-B	5800	2260	2450	5990	2000	2000	1800	1500	Victaulic	6"	Victaulic	2"
ERACS 2102C-B	5800	2260	2450	6320	2000	2000	1800	1500	Victaulic	6"	Victaulic	2"
ERACS 2402C-B	7000	2260	2450	7550	2000	2000	1800	1500	Victaulic	8"	Victaulic	2"
ERACS 2652C-B	7000	2260	2450	7610	2000	2000	1800	1500	Victaulic	8"	Victaulic	2"
ERACS 2952C-B	7900	2260	2450	8610	2000	2000	1800	1500	Victaulic	8"	Victaulic	2"
ERACS 3302C-B	7900	2260	2450	9080	2000	2000	1800	1500	Victaulic	8"	Victaulic	2"
ERACS 3602C-B	9400	2260	2450	9630	2000	2000	1800	1500	Victaulic	8"	Victaulic	2"
ERACS 3902C-B	11200	2260	2450	10210	2000	2000	1800	1500	Victaulic	8"	Victaulic	2"
ERACS 4252C-B	11200	2260	2450	10300	2000	2000	1800	1500	Victaulic	8"	Victaulic	2"
ERACS 1902C-SL	5800	2260	2450	6290	2000	2000	1800	1500	Victaulic	6"	Victaulic	2"
ERACS 2102C-SL	5800	2260	2450	6620	2000	2000	1800	1500	Victaulic	6"	Victaulic	2"
ERACS 2402C-SL	7000	2260	2450	7850	2000	2000	1800	1500	Victaulic	8"	Victaulic	2"
ERACS 2652C-SL	7000	2260	2450	7910	2000	2000	1800	1500	Victaulic	8"	Victaulic	2"
ERACS 2952C-SL	7900	2260	2450	8950	2000	2000	1800	1500	Victaulic	8"	Victaulic	2"
ERACS 3302C-SL	7900	2260	2450	9440	2000	2000	1800	1500	Victaulic	8"	Victaulic	2"
ERACS 3602C-SL	9400	2260	2450	10000	2000	2000	1800	1500	Victaulic	8"	Victaulic	2"
ERACS 3902C-SL	11200	2260	2450	10570	2000	2000	1800	1500	Victaulic	8"	Victaulic	2"
ERACS 4252C-SL	11200	2260	2450	10670	2000	2000	1800	1500	Victaulic	8"	Victaulic	2"

Unit Dimension

ERACS4653-5553C

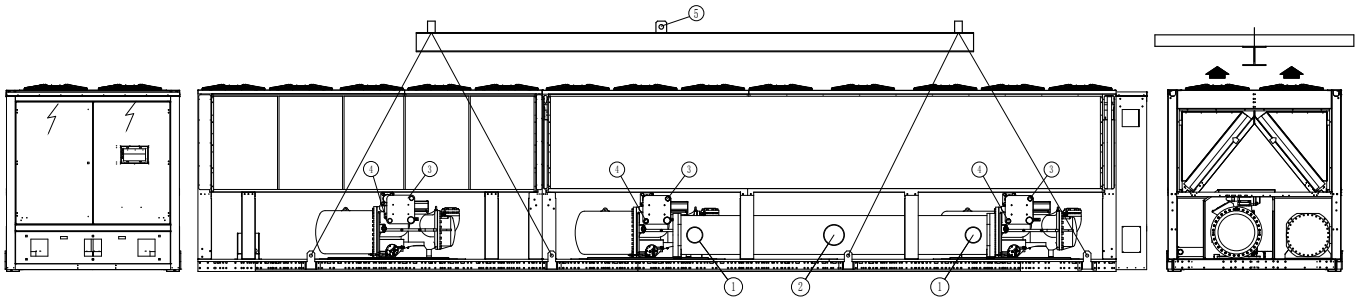

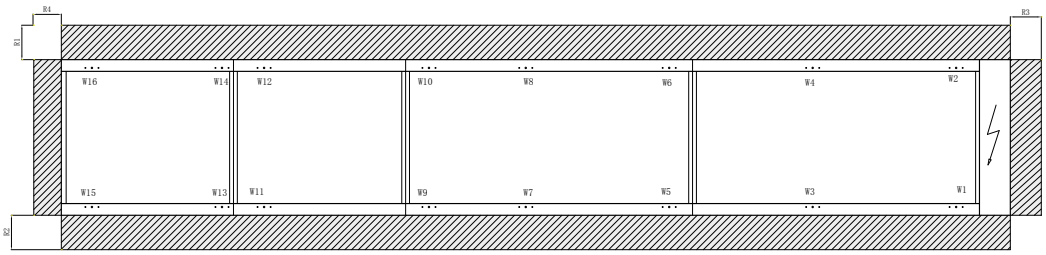

① Evaporator water inlet
② Evaporator water outlet
③ Partial heat recovery water inlet
④ Partial heat recovery water outlet
⑤ Lifting points

Minimum maintenance allowance

Model	Dimensions				Maintenance allowance				Evaporator pipe connection		Partial heat recovery pipe connection	
	A(mm)	B(mm)	H(mm)	Operating weight(Kg)	R1(mm)	R2(mm)	R3(mm)	R4(mm)	Type	IN/OUT(ϕ)	Type	IN/OUT(ϕ)
ERACS 4653C-B	12400	2260	2450	13290	2000	2000	1800	1500	Victaulic	8"/10"	Victaulic	2"
ERACS 5103C-B	12400	2260	2450	13410	2000	2000	1800	1500	Victaulic	8"/10"	Victaulic	2"
ERACS 5553C-B	12400	2260	2450	13480	2000	2000	1800	1500	Victaulic	8"/10"	Victaulic	2"
ERACS 4653C-SL	12400	2260	2450	13780	2000	2000	1800	1500	Victaulic	8"/10"	Victaulic	2"
ERACS 5103C-SL	12400	2260	2450	13900	2000	2000	1800	1500	Victaulic	8"/10"	Victaulic	2"
ERACS 5553C-SL	12400	2260	2450	13980	2000	2000	1800	1500	Victaulic	8"/10"	Victaulic	2"

Climaveneta Italy:
36061 BASSANO DEL GRAPPA (VICENZA) ITALIA - VIA SARSON 57/c
TEL. +39 / 0424 509 500 (r.a.) - TELEFAX +39 / 0424 509 509
E-mail:info@climaveneta.com http://www.climaveneta.com

Climaveneta China:
No,88 Baiyun Road Xinghuo Developing Zone ,Shanghai,China Post Code:201419
TEL: +86-21-57505566 FAX: +86-21-57505797
E-mail:info@climaveneta.com.cn http://www.climaveneta.com.cn

Climaveneta Hongkong:
Room 2003,CCT Telecom Building, 11 Wo Shing Street,Fotan,Shatin,N.T.,Hongkong
TEL: +852-26871755 FAX: +85-2-26873078
E-mail:info@climaveneta.com.cn http://www.climaveneta.com

Climaveneta Vietnam:
6th Floor, Room 6.6B, Etown2, 364 Cong Hoa Street, Ward 13, Tan Binh District, Ho Chi Minh City
TEL: +848 6262 9966 FAX: +848 6262 9977
E-mail: info@climaveneta.com.cn http:// www.climaveneta.com

B112 CCU/02-04-2015EN-SH